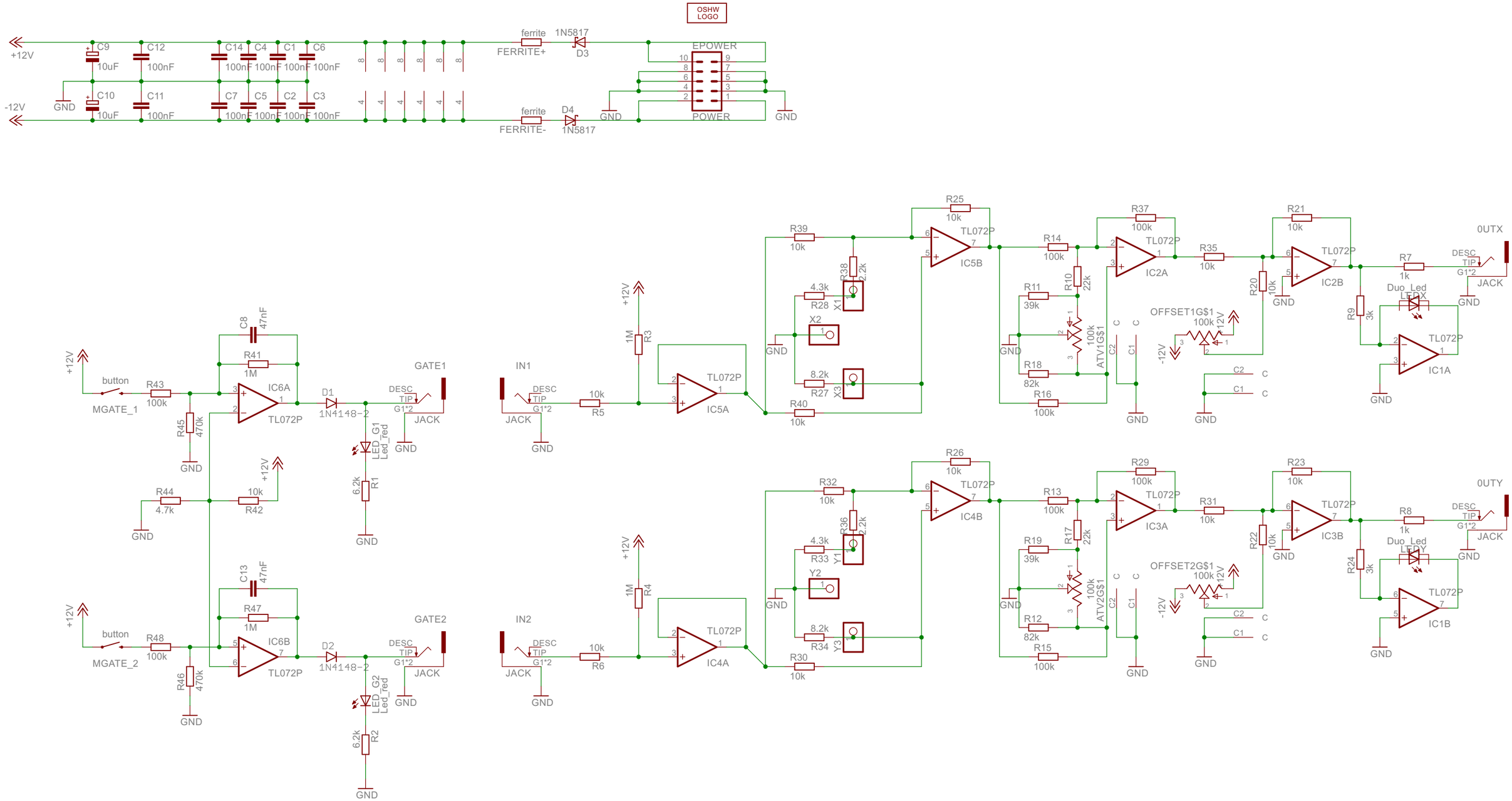
OSHW LOGO
+12V
-12V
GND
C9 10uF
C10 10uF
C12 100nF
C11 100nF
C14 100nF
C4 100nF
C1 100nF
C6 100nF
C7 100nF
C5 100nF
C2 100nF
C3 100nF
ferrite FERRITE+
ferrite FERRITE-
1N5817 D3
D4 1N5817
EPOWER
POWER
button MGATE_1
button MGATE_2
R43 100k
R44 4.7k
R45 470k
R46 470k
R48 100k
R41 1M
R47 1M
C8 47nF
C13 47nF
IC6A
IC6B
TL072P
D1 1N4148-2
D2 1N4148-2
LED_G1 Led_Red
LED_G2 Led_Red
6.2k R1
6.2k R2
R42 10k
GATE1
GATE2
DESC TIP G1*2
JACK
IN1
IN2
R5 10k
R6 10k
R3 1M
R4 1M
IC5A
IC4A
R39 10k
R38 2.2k
4.3k R28
X1
X2
8.2k R27
X3
R40 10k
R25 10k
IC5B
R32 10k
R36 2.2k
4.3k R33
Y1
Y2
8.2k R34
Y3
R30 10k
R26 10k
IC4B
R14 100k
R11 39k
R10 22k
R18 82k
R16 100k
100k ATV1G$1
R13 100k
R19 39k
R17 22k
R12 82k
R15 100k
100k ATV2G$1
R37 100k
IC2A
IC3A
R29 100k
R35 10k
R31 10k
OFFSET1G$1 100k
OFFSET2G$1 100k
C2
C1
R21 10k
R20 10k
IC2B
R23 10k
R22 10k
IC3B
R7 1k
R9 3k
Duo_Led LEDX
IC1A
R8 1k
R24 3k
IC1B
0UTX
0UTY