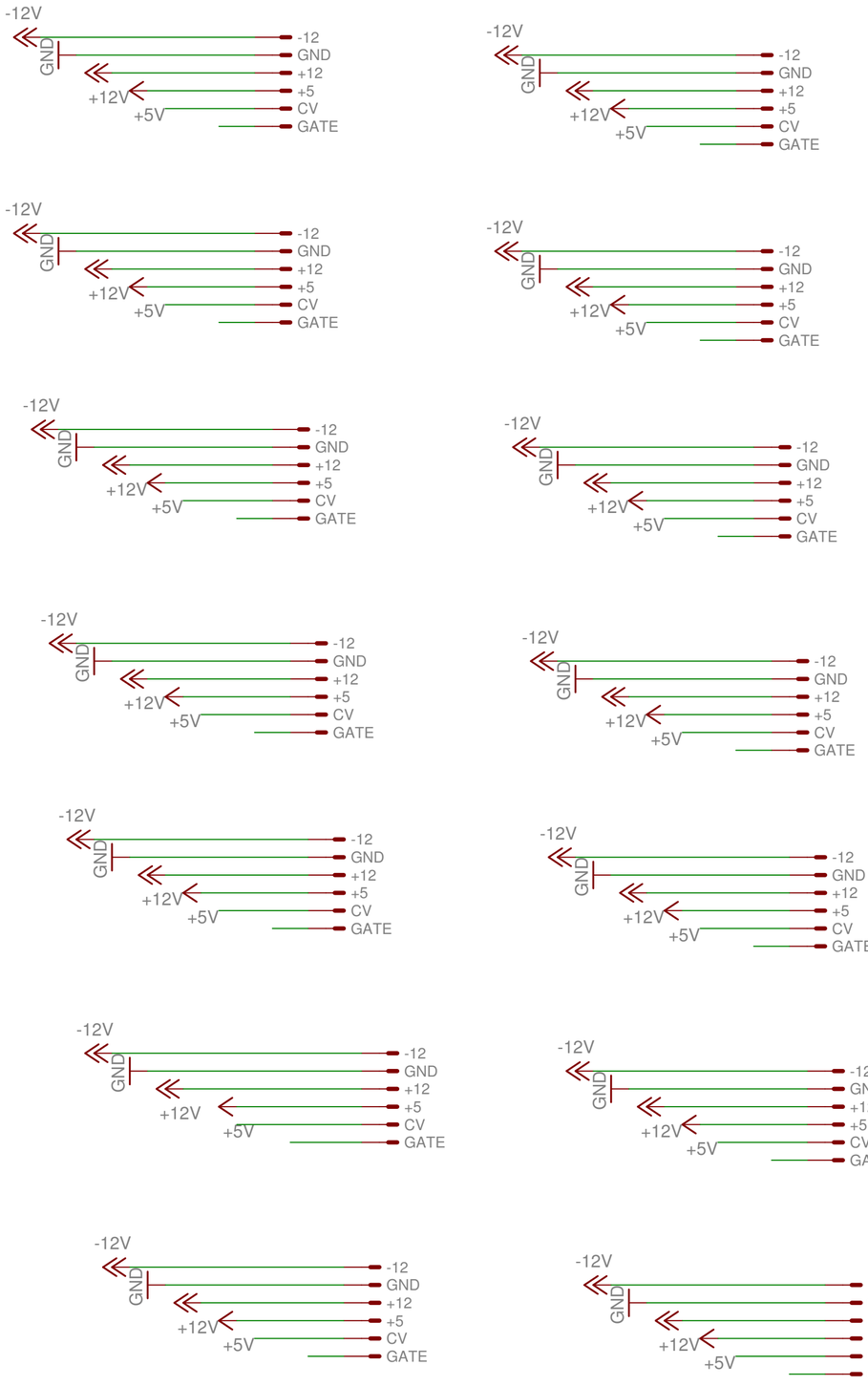
-12V
GND
+12V
+5V
-12
GND
+12
+5
CV
GATE

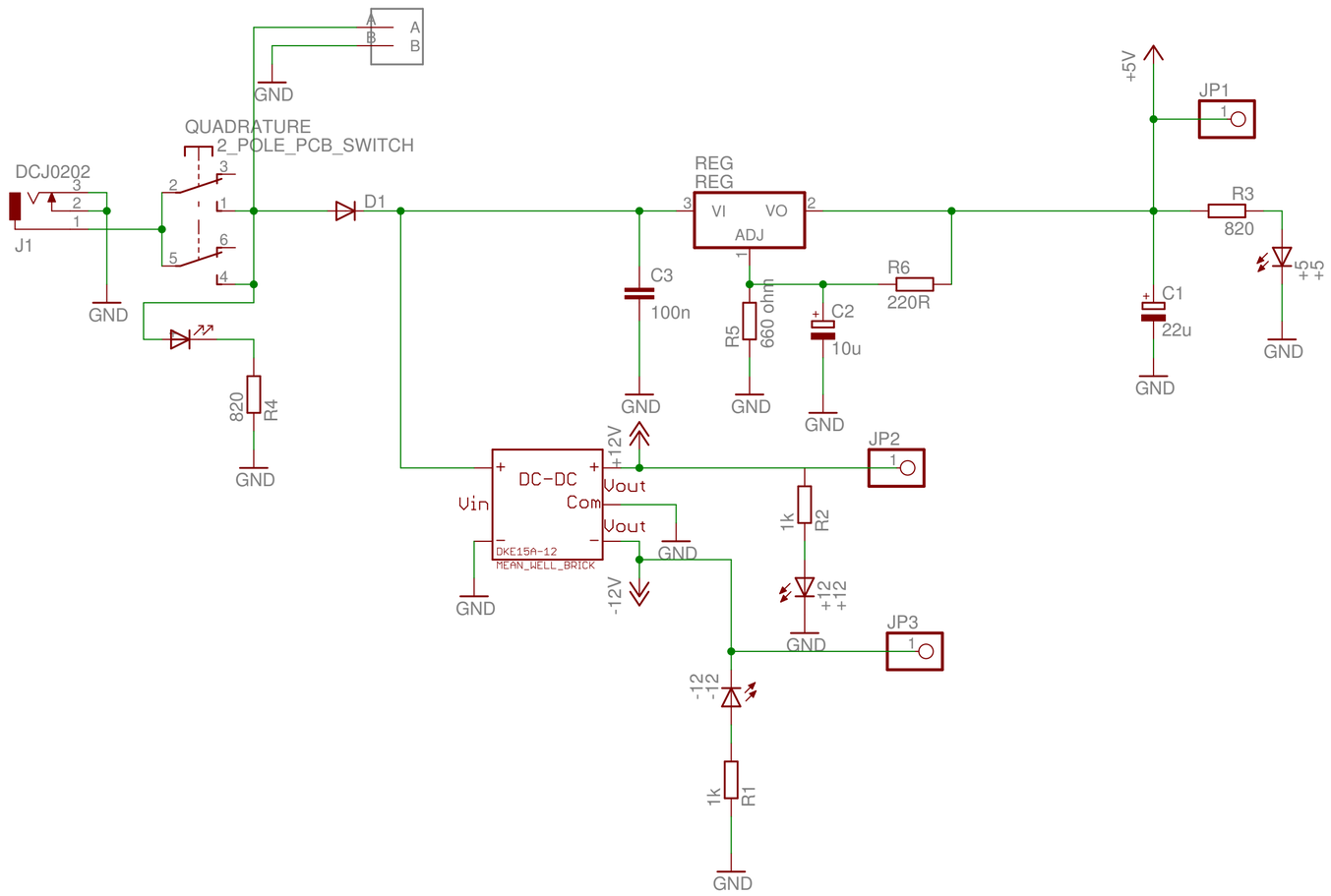
A
B
GND
QUADRATURE
2_POLE_PCB_SWITCH
DCJ0202
J1
D1
REG
REG
VI
VO
ADJ
C3
100n
R5
660 ohm
C2
10u
R6
220R
R3
820
C1
22u
+5V
JP1
+5
R4
820
DC-DC
Vin
Com
Vout
+12V
-12V
DKE15A-12
MEAN_WELL_BRICK
JP2
JP3
R2
1k
R1
1k
+12
-12