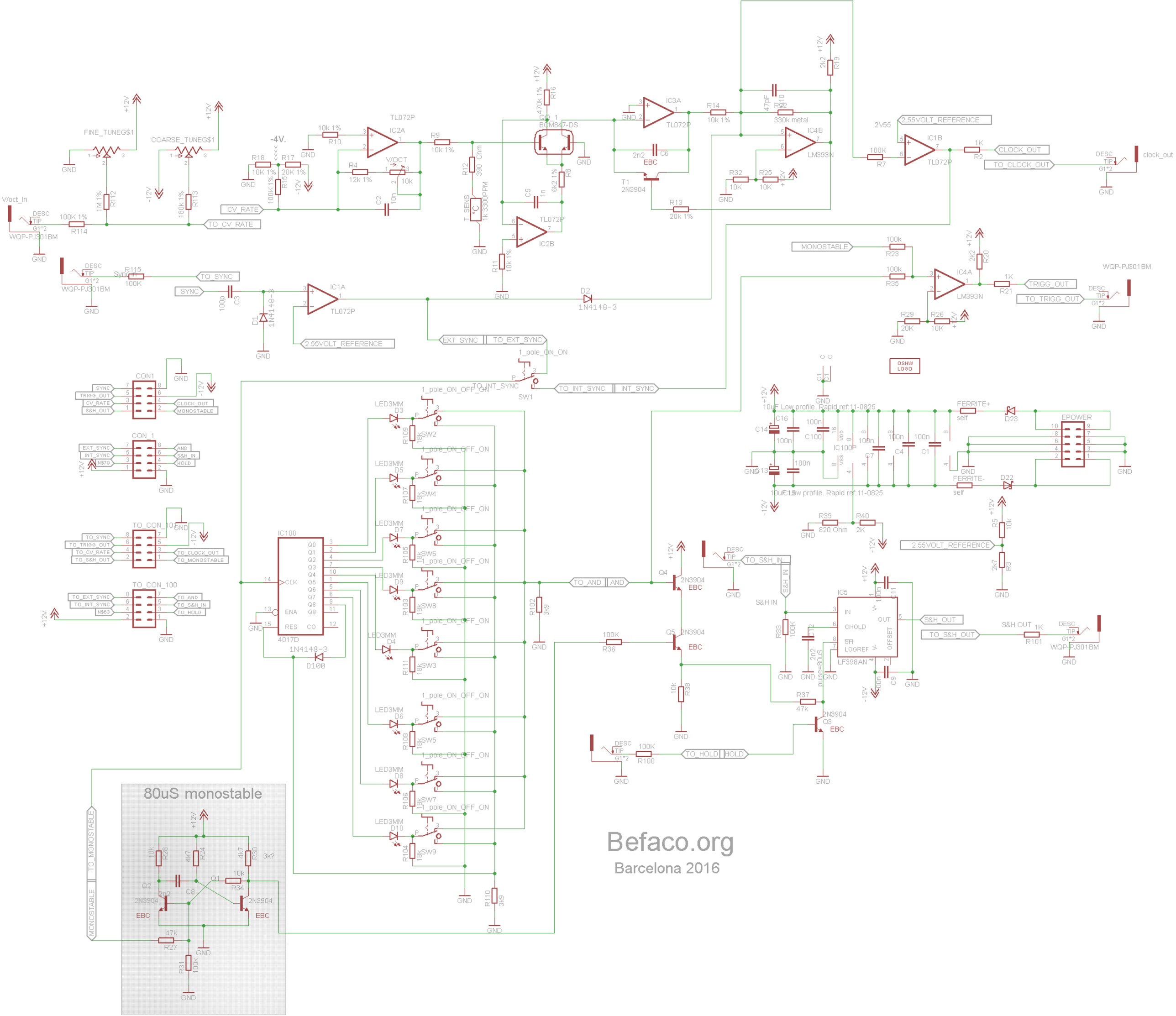

Befaco.org
Barcelona 2016
80uS monostable
FINE_TUNEG$1
COARSE_TUNEG$1
Voct_In
WQP-PJ301BM
CV_RATE
TO_CV_RATE
TL072P
IC2A
IC2B
IC1A
IC1B
IC3A
IC4A
IC4B
LM393N
BCM847-DS
T1
2N3904
2.55VOLT_REFERENCE
CLOCK_OUT
TO_CLOCK_OUT
clock_out
MONOSTABLE
TRIGG_OUT
TO_TRIGG_OUT
SYNC
TO_SYNC
EXT_SYNC
TO_EXT_SYNC
TO_INT_SYNC
INT_SYNC
1_pole_ON_ON
1_pole_ON_OFF_ON
SW1
CON1
CON_1
TO_CON_100
TO_CON_101
IC100
4017D
LED3MM
TO_AND
AND
TO_S&H_IN
S&H_IN
S&H_OUT
TO_S&H_OUT
IC5
LF398AN
TO_HOLD
HOLD
TO_MONOSTABLE
EPOWER
FERRITE+
FERRITE-
OSHW LOGO